18/12/13

F.E Sem II CBGS
Engineering Drawing

2nd Half-2013-mina-(c)-69

Con. 5737-13. **(REVISED COURSE)** **GX - 10171**

(3 Hours) **[Total Marks : 60**

N. B. : (1) Question No. **1** is **compulsory**. Answer any **three** from the remaining **five** questions.
(2) **All** dimensions are in **mm**.
(3) Assume **suitable** data, wherever **required**.
(4) Use **pencil** only to draw **diagrams**.
(5) Use only **first** angle of **projection**.
(6) Retain **all** construction lines.

1. (a) A line AB 100 mm long is tangent at the top of a circular disc of 70 mm. diameter. The point A is at the top of the circumference. The line AB rolls around the circumference of the circular disc in a clockwise direction. Draw the locus of the end 'A', till the end B touches the circle. Name the curve. **6**

(b) Pictorial view of a block is shown in **figure**. **9**
Draw its : (i) F. V. along 'X' and
(ii) RHSV

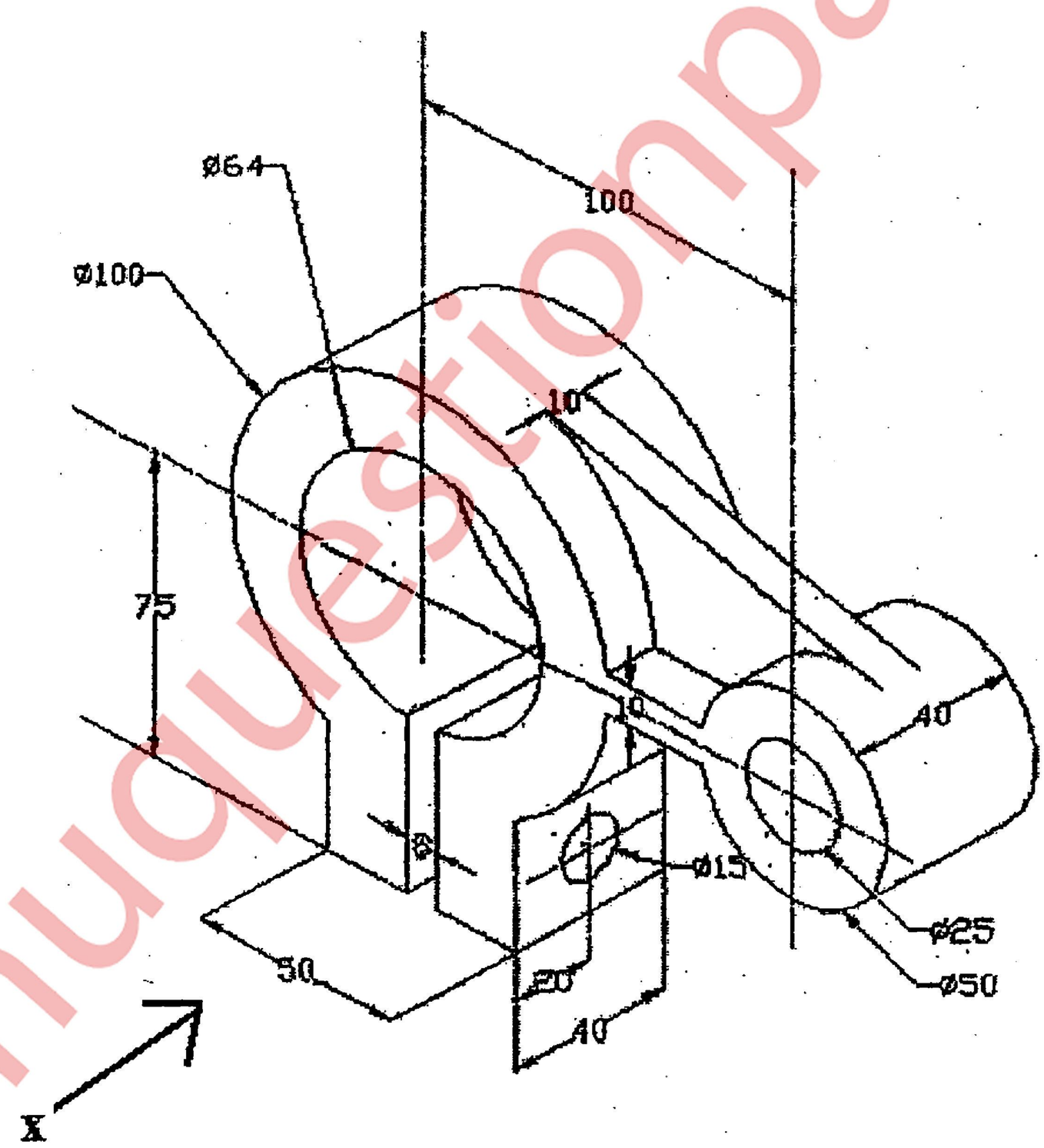

[TURN OVER

muquestionpapers.com

2. For the given pictorial view, draw :—
   (a) Sectional F. V. (Section B-B) **6**
   (b) T. V. **4**
   (c) RHSV. **4**

   Insert at least 10 major dimensions. **1**

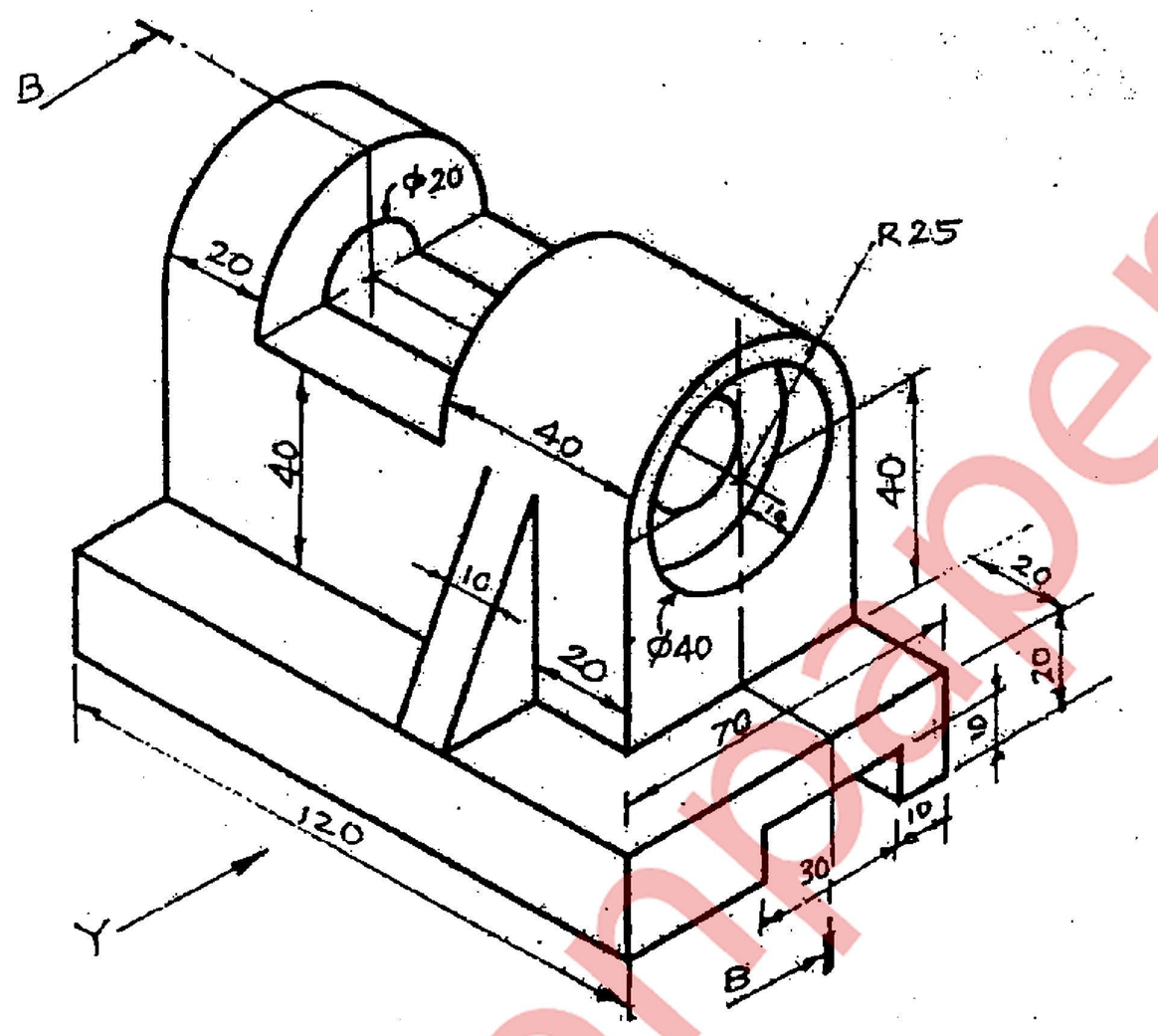

3. A pentagonal pyramid, 40 mm edge of the base and axis height 70 mm is resting on one of its corner of base in VP. The edge opposite to the corner is parallel to and 45 mm in front of VP and parallel to HP. Draw the projections when apex is nearer to observer. **15**

4. (a) A hexagonal prism with edge of bars 30 mm and height 70 mm has its edge of base in the VP and the base surface is inclined at 30° to VP and ⊥ r to HP. Draw its projections. **6**

   (b) **Figure** shows F. V. and T. V. of an object. Draw isometric view of the object, using natural scale. **9**

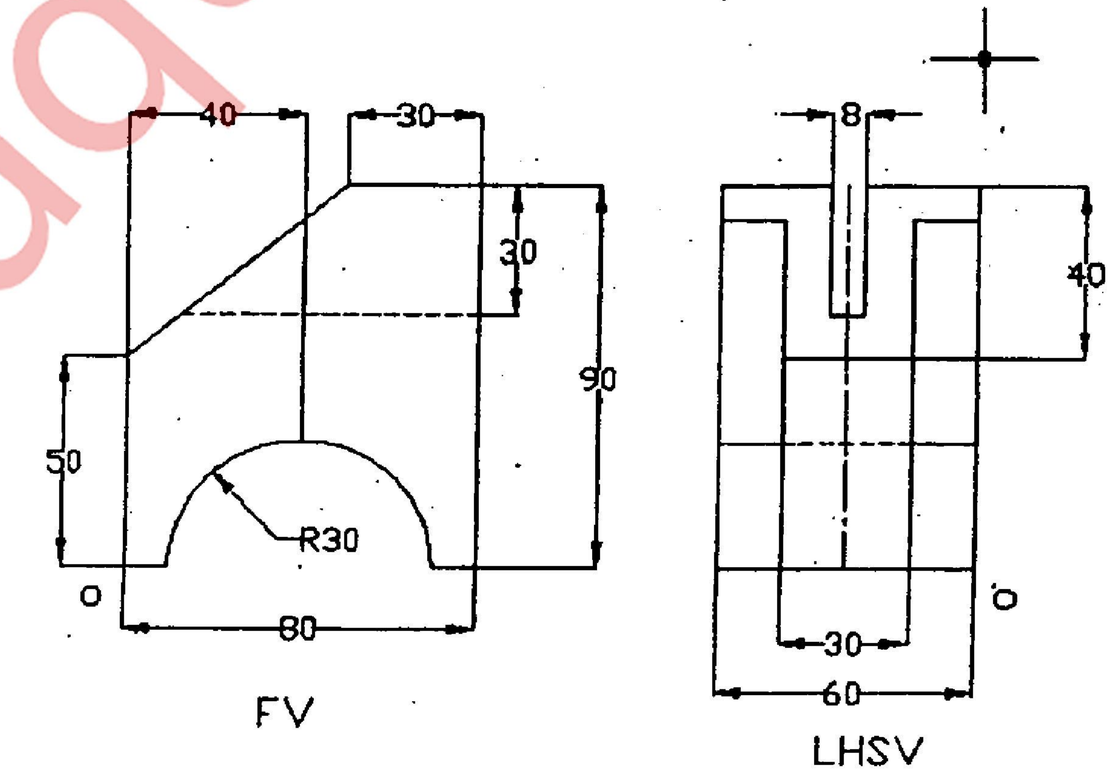

muquestionpapers.com

5. A hexagonal pyramid base 25 mm side, axis 55 mm long has its base on HP, with an edge of base parallel to VP. A section plane perpendicular to VP and inclined at 60 degrees to HP bisects the axis of the pyramid. Draw FV, sectional TV, true shape of the section and Development of Lateral Surface of pyramid removing apex. ~~9~~ 15

6. (a) Line AB 70 mm long is inclined 30° to HP and 60° to VP. Its end A is 10 mm above HP and 20 mm infront of VP, while its end B is in 3rd Quadrant. Draw projections of line AB. **9**

   (b) Draw the isometric view using given F. V. and LHSV. **6**

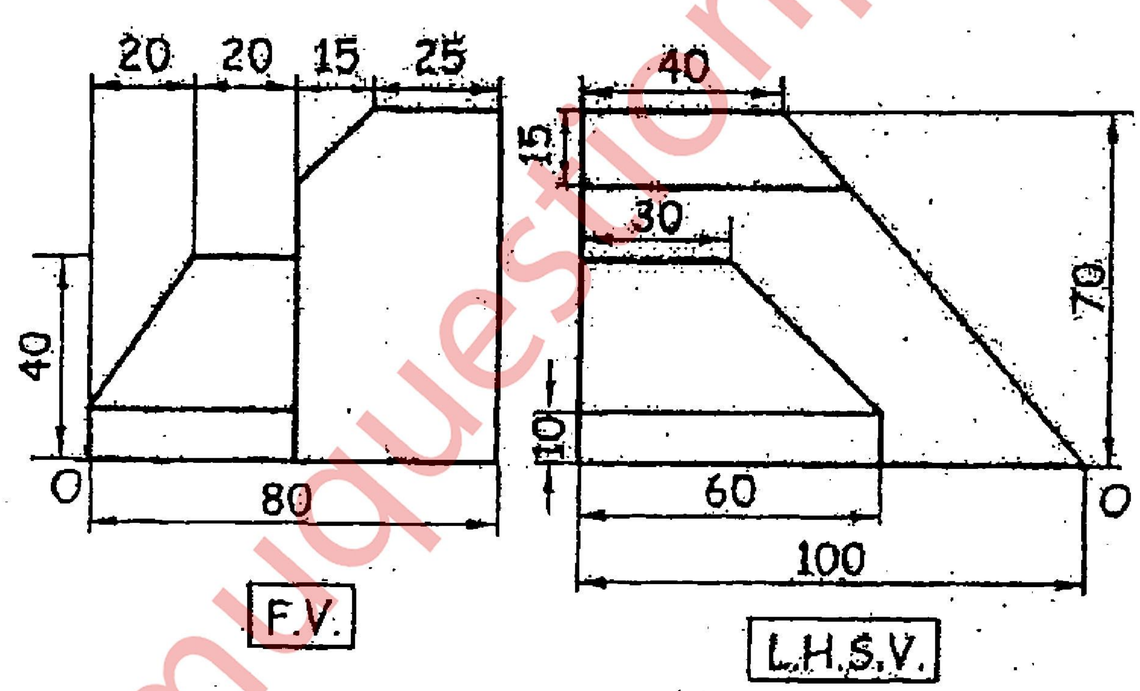

muquestionpapers.com